CAD FILE:

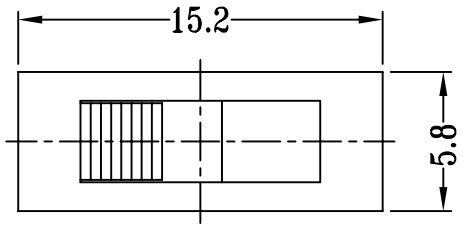

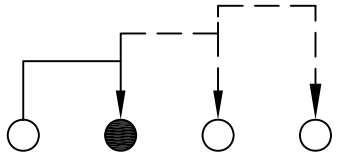

SCHEMATIC (NON-SHORTING)

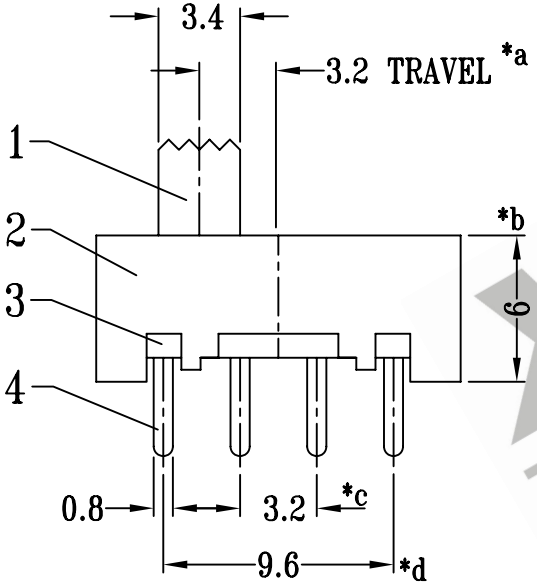

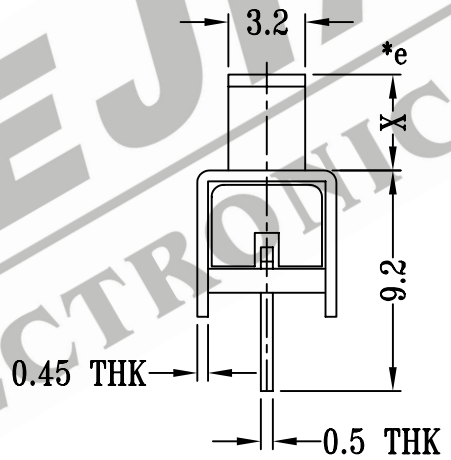

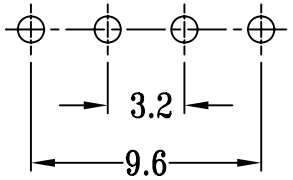

P.C.B LAYOUT

注:带"*"表示关键尺寸(5个)

NO.	PARTS	MATERIALS	Q'TY	FINISH
8				
7	CONTACT CLIP	BRASS STRIP	1	Ag PLATED
6	STEEL BALL	STEEL	1	Ag PLATED
5	SPRING	STEEL WIRE	1	TEMPER
4	TERMINAL	BRASS STRIP	4	Ag PLATED OVER Ni PLATED
3	BASE	PHENOLIC RESIN	1	NATURAL
2	FRAME	STEEL STRIP	1	Ni PLATED
1	KNOB	POM	1	BLACK

TOLERANCE UNLESS SPECIFIED
WITHIN: 1.5±0.1mm
OVER : 1.5±0.2mm

SHENZHEN XIEJIA ELECTRONICS CO.,LTD.

ISSUE	DATE	DESCRIPTIONS OF REVISION	APPD.

TITLE : VERTICAL SLIDE SWITCH

UNIT : mm

DRWG NO.: XJ-DR-SS13F06-00

MODEL: SS-13F06

SCALE: 3 : 1

ALL MATERIALS MUST BE COMPLIANT TO ROHS

DWN.	ZHOUYU	2003-7-16
CHK'D	FANGYING	2003-7-16
APPD.	KANGXINAN	2003-7-16

XIEJIA ELECTRONICS